SRX3

DATALOGIC

HIGH PERFORMANCE ULTRASONIC FORK SENSORS FOR TRANSPARENT LABEL DETECTION

- Dynamic or static teach models
- Slot size 3mm
- High resolution up to 2 mm label gap
- M8 connector with PNP or NPN output
- M12 connector with PNP/NPN output and external teach-in
- Rugged and sturdy aluminium housing

APPLICATIONS

- Detection of transparent, opaque, or metallic ink labels
- Double sheet detection
- Adhesive surface detection

SRX3		
Slot width		3 mm
Slot depth		68 mm
Switching frequency		500 hz
Emission type		Ultrasonic 300 Khz
Setting		300 mm
Power supply	Vdc	12...30 Vdc ●
Output	PNP	●
	NPN	●
Connection	Connector	M12 5-pin
	Connector	M8 4-pin
Approximate dimensions (mm)		90 x 55 x 22
Housing material		Aluminium
Mechanical protection		IP54

TECHNICAL DATA

SPECIFICATION	
Minimum pulse time	1ms
Detectable size	> 2mm
Max. tape speed	60m/min
Tape size	> 16mm
Ultrasonic frequency	300 Khz
ELECTRICAL DATA	
Power supply	12...30 Vdc
Current consumption	< 55mA
Ripple	10%
Output current	250 mA max.
Output saturation voltage	< 1,5V @ 100mA
Rising time	0,8 us max
Falling time	1,6 us max
Power On delay	325 ms
Response time	1ms
Switching frequency	500 hz
Output	PNP / NPN
MECHANICAL DATA	
Connection	M12 5 pin
Operating temperature	0 °C ... +50 °C
Storage temperature	-25 °C ... +75 °C
Humidity	35...85% rH non condensing
Vibration	0.5 mm amplitude, 10 ... 55 Hz frequency, for every axis (EN60068-2-6)
Shock resistance	11 ms (30 G) 6 shock for every axis (EN60068-2-27)
Housing material	Aluminium
Protection class	IP54
Weight	300g

DIMENSIONS

M12 CONNECTOR

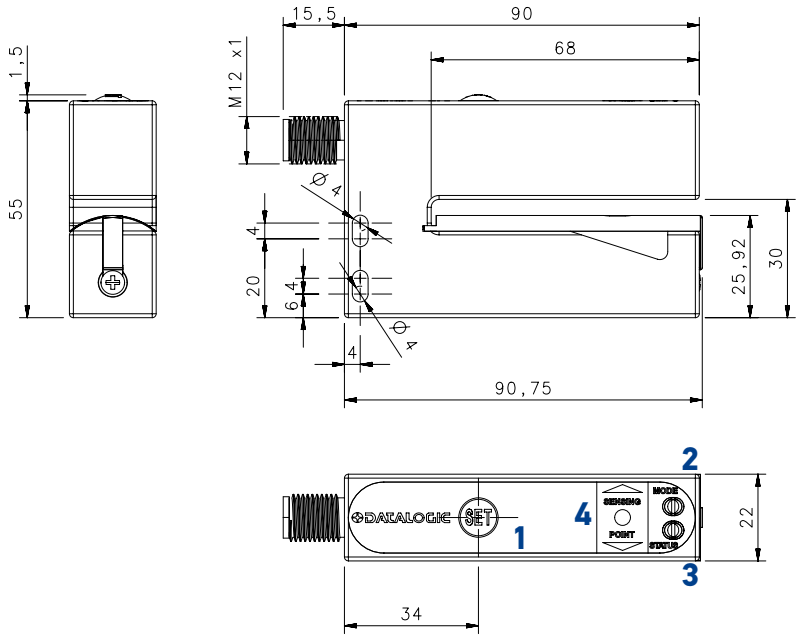

M8 CONNECTOR

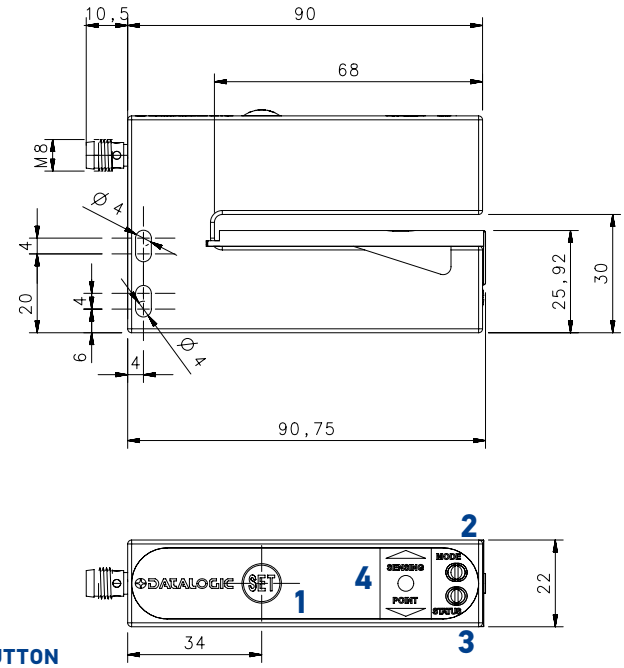

1 - TEACH-IN PUSH BUTTON
2 - MODE LED
3 - STATUS LED
4 – SENSING POINT REFERENCE

INDICATORS AND SETTINGS

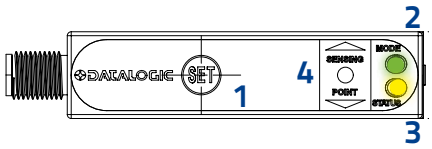

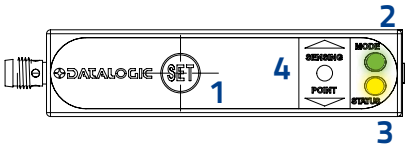

1 - TEACH-IN PUSH BUTTON
2 - MODE LED
3 - STATUS LED (OUTPUT LED)
4 – SENSING POINT REFERENCE

CONNECTIONS

M12 CONNECTOR – 5 PIN

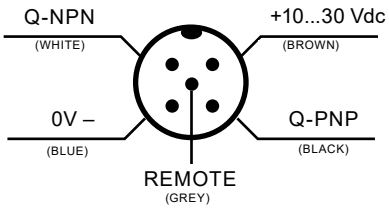

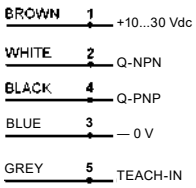

M8 CONNECTOR –8 PIN

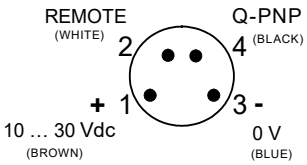

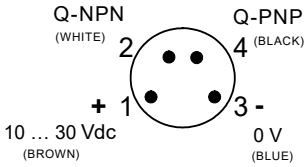

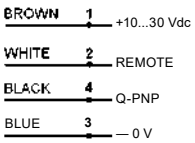

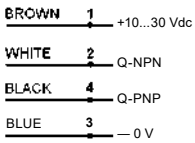

MODEL SELECTION AND ORDER INFORMATION

ADJUSTMENT	OUTPUT	CONNECTION	MODEL	ORDER No.
Dynamic Teach-in	PNP/NPN +EXT	M12 5 pin	SRX3-5-US-M12-PNH	953171000
Static Teach-in	PNP/NPN +EXT	M12 5 pin	SRX3-5-US-3-M12-PNH	953171010
Dynamic Teach-in	PNP+EXT	M8 4 pin	SRX3-6-US-M8-PH	953171020
Static Teach-in	PNP+EXT	M8 4 pin	SRX3-6-US-3-M8-PH	953171030
Dynamic Teach-in	PNP/NPN	M8 4 pin	SRX3-6-US-M8-PN	953171040
Static Teach-in	PNP/NPN	M8 4 pin	SRX3-6-US-3-M8-PN	953171050

CABLES

TYPE	No. Of POLES	SHEAT	LENGTH	DESCRIPTION	ORDER No.
Female M12 Connector (Axial)	5-poles	Grey, P.V.C.	3 m	CS-A1-03-G-03	95ACC2110
			5 m	CS-A1-03-G-05	95ACC2120
			10 m	CS-A1-03-G-10	95ACC2140
		Black, P.V.C. UL	3	CS-A1-03-U-03	95ASE1170
			5	CS-A1-03-U-05	95ASE1180
			10	CS-A1-03-U-10	95ASE1190
M8 Connector (Axial)	4-poles	Grey, P.V.C.	3 m	CS-B-1-02-G-03	95A251420
			5 m	CS-B-1-02-G-05	95A251430
			7 m	CS-B-1-02-G-07	95A251440
			10 m	CS-B-1-02-G-10	95A251480
		P.U.R.	2 m	CS-B-1-02-R-02	95A251500
			5 m	CS-B-1-02-R-05	95A251520
M8 Connector (radial 90°)	4-poles	Grey, P.V.C.	3 m	CS-B2-02-G-03	95A251450
			5 m	CS-B2-02-G-05	95A251480
			7 m	CS-B2-02-G-07	95A251470
		P.U.R.	5 m	CS-B2-02-R-05	95ACC2110

Rev. 03, 04/2019

The company endeavours to continuously improve and renew its products; for this reason the technical data and contents of this catalogue may undergo variations without prior notice. For correct installation and use, the company can guarantee only the data indicated in the instruction manual supplied with the products. Product and Company names and logos referenced may be either trademarks or registered trademarks of their respective companies. We reserve the right to make modifications and improvements.